BI-505-x-x

LED Color | Cable Wire Length (L: mm)

LED Model	COLOR	비고	Maker
L-503HD	R	Red	Para Light
L-503GD	G	Green	
L-503YD	Y	Yellow	

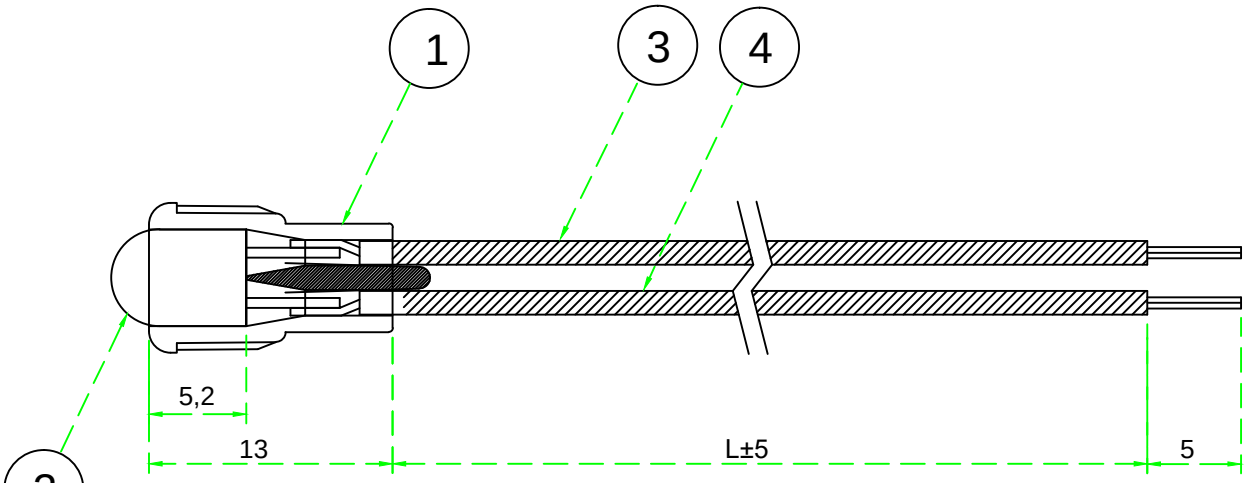

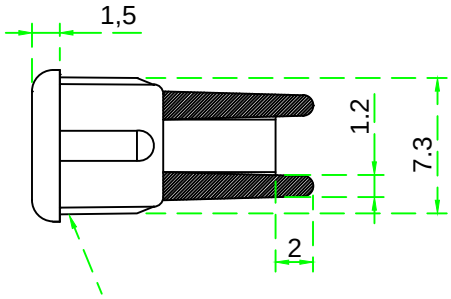

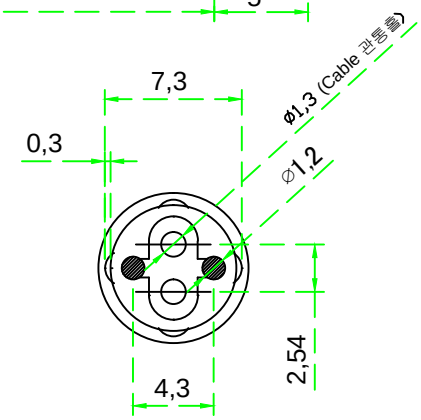

PANEL MOUNT HOLE: ø7.25

(상세 치수는 샘플 실장 적용후 선택요망)

No.	Title	Iteam	Color	Material	Remark
4	Reed Wire	UL 1007			AWG26
3	Reed Wire	UL 1007			AWG26
2	5ø LED				Para Light
1	LED Holder	BI-505	Black	PC	BUIL

(MOQ 문의)

NOTE.

1. 지시하지 않은 공차 : General Tolerances

GENERAL TOLERANCES		
0 ~ 10	±0.3	±1.5°
10 ~ 20	±0.5	
20 ~ 50	±0.8	
50 ~ 100	±1.0	
Scale	/	
Material	PC	
Finish		

Part Name. LED Module

Dwg No. BI-505-x-x

Drawing BY.	Checkd BY.	Approval BY.	Sheet No.	of

(주)부일일렉트로닉스
BUIL ELECTRONICS CO., LTD.
www.ebuil.com