	Part Name	Material	Plating	Remark
4				
3	Screw	Steel	Ni	M3.5
2	Terminal	Brass	TIN	1/2H
1	Base	PBT		UL94 V-0

Current rating	AC250V 10Amp
Insulation resistance	1000M Ohms of More at DC500V
Withstand voltage	AC2000V/Minute
Wire range	AWG #14~#22
Torque	6.9 lb-in

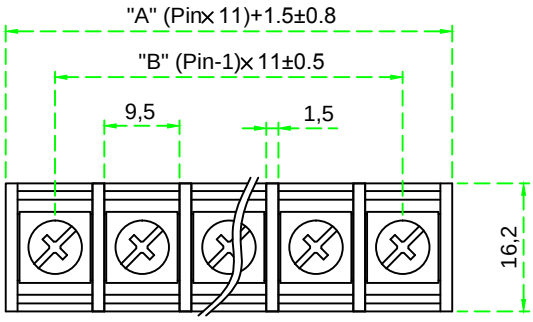

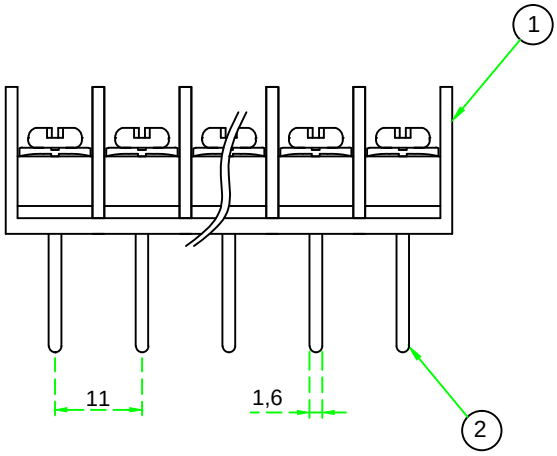

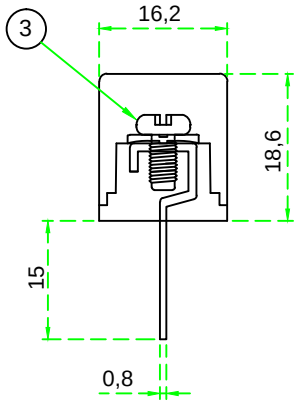

PCB hole Dia: ø2.0

(Option)

1. Cover 사용시 No: BI-11A-1SC(0.8t)-✳P

(Note)

2. 지시하지 않은 공차: **GENERAL TOLERANCES**

GENERAL TOLERANCES	
0 ~ 50	±0.5
50 ~ 100	±0.8
100 ~ 150	±1.0
150 ~ 200	±1.2
Scale	/
Materal	
Finish	

Part Name.
Terminal block

Dwg No.
BI-11A-1S(0.8t)-✳P

Drawing BY.	Checkd BY.	Approval BY.	Sheet No.	of

(주)부일일렉트로닉스
BUIL ELECTRONICS CO., LTD.
www.ebuil.com